STATE OF MINNESOTA

DISTRIBUTED GENERATION INTERCONNECTION REQUIREMENTS

TABLE OF CONTENTS

	Foreword	2
1.	Introduction	3
2.	References	6
3.	Types of Interconnections	7
4.	Interconnection Issues and Technical Requirements	10
5.	Generation Metering, Monitoring and Control	13
	Table 5A – Metering, Monitoring and Control Requirements	14
6.	Protective Devices and Systems	17
	Table 6A – Relay Requirements	19
7.	Agreements	20
8.	Testing Requirements	21
Attachments:	System Diagrams	
	Figure 1 – Open Transition	25
	Figure 2 – Closed Transition	26
	Figure 3 – Soft Loading Transfer With Limited Parallel Operation	27
	Figure 4 – Soft Loading Transfer With Limited Parallel Operation	28
	Figure 5 – Extended Parallel With Transfer-Trip	29

Foreword

Electric distribution system connected generation units span a wide range of sizes and electrical characteristics. Electrical distribution system design varies widely from that required to serve the rural customer to that needed to serve the large commercial customer. With so many variations possible, it becomes complex and difficult to create one interconnection standard that fits all generation interconnection situations.

In establishing a generation interconnection standard there are three main issues that must be addressed; Safety, Economics and Reliability.

The first and most important issue is safety; the safety of the general public and of the employees working on the electrical systems. This standard establishes the technical requirements that must be met to ensure the safety of the general public and of the employees working with the Area EPS. Typically designing the interconnection system for the safety of the general public will also provide protection for the interconnected equipment.

The second issue is economics; the interconnection design must be affordable to build. The interconnection standard must be developed so that only those items, that are necessary to meet safety and reliability, are included in the requirements. This standard sets the benchmark for the minimum required equipment. If it is not needed, it will not be required.

The third issue is reliability; the generation system must be designed and interconnected such that the reliability and the service quality for all customers of the electrical power systems are not compromised. This applies to all electrical systems not just the Area EPS.

Many generation interconnection standards exist or are in draft form. The IEEE, FERC and many states have been working on generation interconnection standards. There are other standards such as the National Electrical Code (NEC) that, establish requirements for electrical installations. The NEC requirements are in addition to this standard. This standard is designed to document the requirements where the NEC has left the establishment of the standard to “the authority having jurisdiction” or to cover issues which are not covered in other national standards.

This standard covers installations, with an aggregated capacity of 10MW’s or less. Many of the requirements in this document do not apply to small, 40kW or less generation installations. As an aid to the small, distributed generation customer, these small unit interconnection requirements have been extracted from this full standard and are available as a separate, simplified document titled: “Standards for Interconnecting Generation Sources, Rated Less then 40kW with Minnesota Electric Utilities”

1. Introduction

This standard has been developed to document the technical requirements for the interconnection between a Generation System and an area electrical power system “Utility system or Area EPS”. This standard covers 3 phase Generation Systems with an aggregate capacity of 10 MW’s or less and single phase Generation Systems with a aggregate capacity of 40kW or less at the Point of Common Coupling. This standard covers Generation Systems that are interconnected with the Area EPS’s distribution facilities. This standard does not cover Generation Systems that are directly interconnected with the Area EPS’s Transmission System, Contact the Area EPS for their Transmission System interconnection standards.

While, this standard provides the technical requirements for interconnecting a Generation System with a typical radial distribution system, it is important to note that there are some unique Area EPS, which have special interconnection needs. One example of a unique Area EPS would be one operated as a “networked” system. This standard does not cover the additional special requirements of those systems. The Interconnection Customer must contact the Owner/operator of the Area EPS with which the interconnection is intended, to make sure that the Generation System is not proposed to be interconnected with a unique Area EPS. If the planned interconnection is with a unique Area EPS, the Interconnection Customer must obtain the additional requirements for interconnecting with the Area EPS.

The Area EPS operator has the right to limit the maximum size of any Generation System or number of Generation Systems that, may want to interconnect, if the Generation System would reduce the reliability to the other customers connected to the Area EPS.

This standard only covers the technical requirements and does not cover the interconnection process from the planning of a project through approval and construction. Please read the companion document “State of Minnesota Interconnection Process for Distributed Generation Systems” for the description of the procedure to follow and a generic version of the forms to submit. It is important to also get copies of the Area EPS’s tariff’s concerning generation interconnection which will include rates, costs and standard interconnection agreements. The earlier the Interconnection Customer gets the Area EPS operator involved in the planning and design of the Generation System interconnection the smoother the process will go.

A) Definitions

The definitions defined in the "IEEE Standard for Interconnecting Distributed Resources with Electric Power Systems" (1547 Draft Ver. 11) apply to this document as well. The following definitions are in addition to the ones defined in IEEE 1547 , or are repeated from the IEEE 1547 standard.

i) "Area EPS" an electric power system (EPS) that serves Local EPS's. Note. Typically, an Area EPS has primary access to public rights-of-way, priority crossing of property boundaries, etc.

ii) "Generation" any device producing electrical energy, i.e., rotating generators driven by wind, steam turbines, internal combustion engines, hydraulic turbines, solar, fuel cells, etc.; or any other electric producing device, including energy storage technologies.

iii) "Generation System" the interconnected Distributed Generation(s), controls, relays, switches, breakers, transformers, inverters and associated wiring and cables, up to the Point of Common Coupling.

iv) "Interconnection Customer" the party or parties who are responsible for meeting the requirements of this standard. This could be the Generation System applicant, installer, designer, owner or operator.

v) "Local EPS" an electric power system (EPS) contained entirely within a single premises or group of premises.

vi) "Point of Common Coupling" the point where the Local EPS is connected to an Area EPS.

vii) "Transmission System", are those facilities as defined by using the guidelines established by the Minnesota State Public Utilities Commission; "In the Matter of Developing Statewide Jurisdictional Boundary Guidelines for Functionally Separating Interstate Transmission from Generation and Local Distribution Functions" Docket No. E-015/M-99-1002.

viii) "Type-Certified" Generation paralleling equipment that is listed by an OSHA listed national testing laboratory as having met the applicable type testing requirement of UL 1741. At the time is document was prepared this was the only national standard available for certification of generation transfer switch equipment. This definition does not preclude other forms of type-certification if agreeable to the Area EPS operator.

B) Interconnection Requirements Goals

This standard defines the minimum technical requirements for the implementation of the electrical interconnection between the Generation System and the Area EPS. It does not define the overall requirements for the Generation System. The requirements in this standard are intended to achieve the following:

i) Ensure the safety of utility personnel and contractors working on the electrical power system.

ii) Ensure the safety of utility customers and the general public.

iii) Protect and minimize the possible damage to the electrical power system and other customer's property.

iv) Ensure proper operation to minimize adverse operating conditions on the electrical power

system.

C) Protection

The Generation System and Point of Common Coupling shall be designed with proper protective devices to promptly and automatically disconnect the Generation from the Area EPS in the event of a fault or other system abnormality. The type of protection required will be determined by:

i) Size and type of the generating equipment.

ii) The method of connecting and disconnecting the Generation System from the electrical power system.

iii) The location of generating equipment on the Area EPS.

D) Area EPS Modifications

Depending upon the match between the Generation System, the Area EPS and how the Generation System is operated, certain modifications and/or additions may be required to the existing Area EPS with the addition of the Generation System. To the extent possible, this standard describes the modifications which could be necessary to the Area EPS for different types of Generation Systems. For some unique interconnections, additional and/or different protective devices, system modifications and/or additions will be required by the Area EPS operator; In these cases the Area EPS operator will provide the final determination of the required modifications and/or additions. If any special requirements are necessary they will be identified by the Area EPS operator during the application review process.

E) Generation System Protection

The Interconnection Customer is solely responsible for providing protection for the Generation System. Protection systems required in this standard, are structured to protect the Area EPS's electrical power system and the public. The Generation System Protection is not provided for in this standard. Additional protection equipment may be required to ensure proper operation for the Generation System. This is especially true while operating disconnected, from the Area EPS. The Area EPS does not assume responsibility for protection of the Generation System equipment or of any portion Local EPS.

F) Electrical Code Compliance

Interconnection Customer shall be responsible for complying with all applicable local, independent, state and federal codes such as building codes, National Electric Code (NEC), National Electrical Safety Code (NESC) and noise and emissions standards. As required by Minnesota State law, the Area EPS will require proof of complying with the National Electrical Code before the interconnection is made, through installation approval by an electrical inspector recognized by the Minnesota State Board of Electricity.

The Interconnection Customer's Generation System and installation shall comply with latest revisions of the ANSI/IEEE standards applicable to the installation, especially IEEE 1547; "Standard for Interconnecting Distributed Resources with Electric Power Systems". See the reference section in this document for a partial list of the standards which apply to the generation installations covered by this standard.

2. References

The following standards shall be used in conjunction with this standard. When the stated version of the following standards is superseded by an approved revision then that revision shall apply.

IEEE Std 100-2000, "IEEE Standard Dictionary of Electrical and Electronic Terms"

IEEE Std 519-1992, "IEEE Recommended Practices and Requirements for Harmonic Control in Electric Power Systems"

IEEE Std 929-2000,"IEEE Recommended Practice for Utility Interface of Photovoltaic (PV) Systems".

IEEE Std 1547, "IEEE Standard for Interconnecting Distributed Resources with Electric Power Systems"

IEEE Std C37.90.1-1989 (1995), "IEEE Standard Surge Withstand Capability (SEC) Tests for Protective Relays and Relay Systems".

IEEE Std C37.90.2 (1995), "IEEE Standard Withstand Capability of Relay Systems to Radiated Electromagnetic Interference from Transceivers".

IEEE Std C62.41.2-2002, "IEEE Recommended Practice on Characterization of Surges in Low Voltage (1000V and Less) AC Power Circuits"

IEEE Std C62.42-1992 (2002), "IEEE Recommended Practice on Surge Testing for Equipment Connected to Low Voltage (1000V and less) AC Power Circuits"

ANSI C84.1-1995,"Electric Power Systems and Equipment – Voltage Ratings (60 Hertz)"

ANSI/IEEE 446-1995, "Recommended Practice for Emergency and Standby Power Systems for Industrial and Commercial Applications".

ANSI/IEEE Standard 142-1991, "IEEE Recommended Practice for Grounding of Industrial an Commercial Power Systems – Green Book",

UL Std. 1741 "Inverters, Converters, and Controllers for use in Independent Power Systems"

NEC – "National Electrical Code", National Fire Protection Association (NFPA), NFPA-70-2002.

NESC – "National Electrical Safety Code". ANSI C2-2000, Published by the Institute of Electrical and Electronics Engineers, Inc.

3. Types of Interconnections

A) The manner in which the Generation System is connected to and disconnected from the Area EPS can vary. Most transfer systems normally operate using one of the following five methods of transferring the load from the Area EPS to the Generation System.

B) If a transfer system is installed which has a user accessible selection of several transfer modes, the transfer mode that has the greatest protection requirements will establish the protection requirements for that transfer system.

i) Open Transition (Break-Before-Make) Transfer Switch – With this transfer switch, the load to be supplied from the Distributed Generation is first disconnected from the Area EPS and then connected to the Generation. This transfer can be relatively quick, but voltage and frequency excursions are to be expected during transfer. Computer equipment and other sensitive equipment will shut down and reset. The transfer switch typically consists of a standard UL approved transfer switch with mechanical interlocks between the two source contactors that drop the Area EPS source before the Distributed Generation is connected to supply the load.

(1) To qualify as an Open Transition switch and the limited protective requirements, mechanical interlocks are required between the two source contacts. This is required to ensure that one of the contacts is always open and the Generation System is never operated in parallel with the Area EPS. If the mechanical interlock is not present, the protection requirements are as if the switch is a closed transition switch.

(2) As a practical point of application, this type of transfer switch is typically used for loads less then 500kW. This is due to possible voltage flicker problems created on the Area EPS, when the load is removed from or returned to the Area EPS source. Depending up the Area EPS's stiffness this level may be larger or smaller then the 500kW level.

(3) Figure 1 at the end of this document provides a typical one-line of this type of installation.

ii) Quick Open Transition (Break-Before-Make) Transfer Switch – The load to be supplied from the Distributed Generation is first disconnected from the Area EPS and then connected to the Distributed Generation, similar to the open transition. However, this transition is typically much faster (under 500 ms) than the conventional open transition transfer operation. Voltage and frequency excursions will still occur, but some computer equipment and other sensitive equipment will typically not be affected with a properly designed system. The transfer switch consists of a standard UL approved transfer switch, with mechanical interlocks between the two source contacts that drop the Area EPS source before the Distributed Generation is connected to supply the load.

(1) Mechanical interlocks are required between the two source contacts to ensure that one of the contacts is always open. If the mechanical interlock is not present, the protection requirements are as if the switch is a closed transition switch

(2) As a practical point of application this type of transfer switch is typically used for loads less then 500kW. This is due to possible voltage flicker problems created on the Area EPS, when the load is removed from or returned to the Area EPS source. Depending up the Area EPS's stiffness this level may be larger or smaller than the 500kW level.

(3) Figure 2 at the end of this document provides a typical one-line of this type of installation and shows the required protective elements.

iii) Closed Transition (Make-Before-Break) Transfer Switch – The Distributed Generation is synchronized with the Area EPS prior to the transfer occurring. The transfer switch then parallels with the Area EPS for a short time (100 msec. or less) and then the Generation System and load is disconnect from the Area EPS. This transfer is less disruptive than the Quick Open Transition because it allows the Distributed Generation a brief time to pick up the load before the support of the Area EPS is lost. With this type of transfer, the load is always being supplied by the Area EPS or the Distributed Generation.

(1) As a practical point of application this type of transfer switch is typically used for loads less then 500kW. This is due to possible voltage flicker problems created on the Area EPS, when the load is removed from or returned to the Area EPS source. Depending up the Area EPS's stiffness this level may be larger or smaller then the 500kW level.

(2) Figure 2 at the end of this document provides a typical one-line of this type of installation and shows the required protective elements. The closed transition switch must include a separate parallel time limit relay, which is not part of the generation control PLC and trips the generation from the system for a failure of the transfer switch and/or the transfer switch controls.

iv) Soft Loading Transfer Switch

(1) With Limited Parallel Operation – The Distributed Generation is paralleled with the Area EPS for a limited amount of time (generally less then 1-2 minutes) to gradually transfer the load from the Area EPS to the Generation System. This minimizes the voltage and frequency problems, by softly loading and unloading the Generation System.

(a) The maximum parallel operation shall be controlled, via a parallel timing limit relay (62PL). This parallel time limit relay shall be a separate relay and not part of the generation control PLC.

(b) Protective Relaying is required as described in section 6.

(c) Figure 3 at the end of this document provide typical one-line diagrams of this type of installation and show the required protective elements.

(2) With Extended Parallel Operation – The Generation System is paralleled with the Area EPS in continuous operation. Special design, coordination and agreements are required before any extended parallel operation will be permitted. The Area EPS interconnection study will identify the issues involved.

(a) Any anticipated use in the extended parallel mode requires special agreements and special protection coordination.

(b) Protective Relaying is required as described in section 6.

(c) Figure 4 at the end of this document provides a typical one-line for this type of interconnection. It must be emphasized that this is a typical installations only and final installations may vary from the examples shown due to transformer connections, breaker configuration, etc.

v) Inverter Connection

This is a continuous parallel connection with the system. Small Generation Systems may utilize inverters to interface to the Area EPS. Solar, wind and fuel cells are some examples of Generation which typically use inverters to connect to the Area EPS. The design of such inverters shall either contain all necessary protection to prevent unintentional islanding, or the Interconnection Customer shall install conventional protection to affect the same protection. All required protective elements for a soft-loading transfer switch apply to an inverter

connection. Figure 5 at the end of this document, shows a typical inverter interconnection.

(1) Inverter Certification – Prior to installation, the inverter shall be Type-Certified for interconnection to the electrical power system. The certification will confirm its anti-islanding protection and power quality related levels at the Point of Common Coupling. Also, utility compatibility, electric shock hazard and fire safety are approved through UL listing of the model. Once this Type Certification is completed for that specific model, additional design review of the inverter should not be necessary by the Area EPS operator.

(2) For three-phase operation, the inverter control must also be able to detect and separate for the loss of one phase. Larger inverters will still require custom protection settings, which must be calculated and designed to be compatible with the specific Area EPS being interconnected with.

(3) A visible disconnect is required for safely isolating the Distributed Generation when connecting with an inverter. The inverter shall not be used as a safety isolation device.

(4) When banks of inverter systems are installed at one location, a design review by the Area EPS must be preformed to determine any additional protection systems, metering or other needs. The issues will be identified by the Area EPS during the interconnection study process

4. Interconnection Issues and Technical Requirements

A) General Requirements - The following requirements apply to all interconnected generating equipment. The Area EPS shall be the source side and the customer's system shall be the load side in the following interconnection requirements.

i) Visible Disconnect - A disconnecting device shall be installed to electrically isolate the Area EPS from the Generation System. The only exception for the installation of a visible disconnect is if the generation is interconnected via a mechanically interlocked open transfer switch and installed per the NEC (702.6) "so as to prevent the inadvertent interconnection of normal and alternate sources of supply in any operation of the transfer equipment."

The visible disconnect shall provide a visible air gap between Interconnection Customer's Generation and the Area EPS in order to establish the safety isolation required for work on the Area EPS. This disconnecting device shall be readily accessible 24 hours per day by the Area EPS field personnel and shall be capable of padlocking by the Area EPS field personnel. The disconnecting device shall be lockable in the open position.

The visible disconnect shall be a UL approved or National Electrical Manufacture's Association approved, manual safety disconnect switch of adequate ampere capacity. The visible disconnect shall not open the neutral when the switch is open. A draw-out type circuit breaker can be used as a visual open.

The visible disconnect shall be labeled, as required by the Area EPS Operator to inform the Area EPS field personnel.

ii) Energization of Equipment by Generation System – The Generation System shall not energize a de-energized Area EPS. The Interconnection Customer shall install the necessary padlocking (lockable) devices on equipment to prevent the energization of a de-energized electrical power system. Lock out relays shall automatically block the closing of breakers or transfer switches on to a de-energized Area EPS.

iii) Power Factor - The power factor of the Generation System and connected load shall be as follows;

(1) Inverter Based interconnections – shall operate at a power factor of no less then 90%.at the inverter terminals.

(2) Limited Parallel Generation Systems, such as closed transfer or soft-loading transfer systems shall operate at a power factor of no less then 90%, during the period when the Generation System is parallel with the Area EPS, as measured at the Point of Common Coupling.

(3) Extended Parallel Generation Systems shall be designed to be capable of operating between 90% lagging and 95% leading. These Generation Systems shall normally operate near unity power factor (+/-98%) or as mutually agreed between the Area EPS operator and the Interconnection Customer.

iv) Grounding Issues

(1) Grounding of sufficient size to handle the maximum available ground fault current shall be designed and installed to limit step and touch potentials to safe levels as set forth in "IEEE Guide for Safety in AC Substation Grounding", ANSI/IEEE Standard 80.

(2) It is the responsibility of the Interconnection Customer to provide the required grounding for the Generation System. A good standard for this is the IEEE Std. 142-1991

"Grounding of Industrial and Commercial Power Systems"

(3) All electrical equipment shall be grounded in accordance with local, state and federal electrical and safety codes and applicable standards

v) Sales to Area EPS or other parties – Transportation of energy on the Transmission system is regulated by the area reliability council and FERC. Those contractual requirements are not included in this standard. The Area EPS will provide these additional contractual requirements during the interconnection approval process.

B) For Inverter based, closed transfer and soft loading interconnections - The following additional requirements apply:

i) Fault and Line Clearing - The Generation System shall be removed from the Area EPS for any faults, or outages occurring on the electrical circuit serving the Generation System

ii) Operating Limits in order to minimize objectionable and adverse operating conditions on the electric service provided to other customers connected to the Area EPS, the Generation System shall meet the Voltage, Frequency, Harmonic and Flicker operating criteria as defined in the IEEE 1547 standard during periods when the Generation System is operated in parallel with the Area EPS.

If the Generation System creates voltage changes greater than 4% on the Area EPS, it is the responsibility of the Interconnection Customer to correct these voltage sag/swell problems caused by the operation of the Generation System. If the operation of the interconnected Generation System causes flicker, which causes problems for others customer's interconnected to the Area EPS, the Interconnection Customer is responsible for correcting the problem.

iii) Flicker - The operation of Generation System is not allowed to produce excessive flicker to adjacent customers. See the IEEE 1547 standard for a more complete discussion on this requirement.

The stiffer the Area EPS, the larger a block load change that it will be able to handle. For any of the transfer systems the Area EPS voltage shall not drop or rise greater than 4% when the load is added or removed from the Area EPS. It is important to note, that if another interconnected customer complains about the voltage change caused by the Generation System, even if the voltage change is below the 4% level, it is the Interconnection Customer's responsibility to correct or pay for correcting the problem. Utility experience has shown that customers have seldom objected to instantaneous voltage changes of less then 2% on the Area EPS, so most Area EPS operators use a 2% design criteria

iv) Interference - The Interconnection Customer shall disconnect the Distributed Generation from the Area EPS if the Distributed Generation causes radio, television or electrical service interference to other customers, via the EPS or interference with the operation of Area EPS. The Interconnection Customer shall either effect repairs to the Generation System or reimburse the Area EPS Operator for the cost of any required Area EPS modifications due to the interference.

v) Synchronization of Customer Generation-

(1) An automatic synchronizer with synch-check relaying is required for unattended automatic quick open transition, closed transition or soft loading transfer systems.

(2) To prevent unnecessary voltage fluctuations on the Area EPS, it is required that the synchronizing equipment be capable of closing the Distributed Generation into the Area EPS within the limits defined in IEEE 1547 . Actual settings shall be determined by the Registered Professional Engineer establishing the protective settings for the installation.

(3) Unintended Islanding – Under certain conditions with extended parallel operation, it would be possible for a part of the Area EPS to be disconnected from the rest of the Area EPS and have the Generation System continue to operate and provide power to a portion of the isolated circuit. This condition is called “islanding”. It is not possible to successfully reconnect the energized isolated circuit to the rest of the Area EPS since there are no synchronizing controls associated with all of the possible locations of disconnection. Therefore, it is a requirement that the Generation System be automatically disconnected from the Area EPS immediately by protective relays for any condition that would cause the Area EPS to be de-energized. The Generation System must either isolate with the customer’s load or trip. The Generation System must also be blocked from closing back into the Area EPS until the Area EPS is reenergized and the Area EPS voltage is within Range B of ANSI C84.1 Table 1 for a minimum of 1 minute. Depending upon the size of the Generation System it may be necessary to install direct transfer trip equipment from the Area EPS source(s) to remotely trip the generation interconnection to prevent islanding for certain conditions

vi) Disconnection – the Area EPS operator may refuse to connect or may disconnect a Generation System from the Area EPS under the following conditions:

(1) Lack of approved Standard Application Form and Standard Interconnection Agreement.

(2) Termination of interconnection by mutual agreement.

(3) Non-Compliance with the technical or contractual requirements.

(4) System Emergency or for imminent danger to the public or Area EPS personnel (Safety).

(5) Routine maintenance, repairs and modifications to the Area EPS. The Area EPS operator shall coordinate planned outages with the Interconnection Customer to the extent possible.

5. Generation Metering, Monitoring and Control

Metering, Monitoring and Control – Depending upon the method of interconnection and the size of the Generation System, there are different metering, monitoring and control requirements Table 5A is a table summarizing the metering, monitoring and control requirements..

Due to the variation in Generation Systems and Area EPS operational needs, the requirements for metering, monitoring and control listed in this document are the expected maximum requirements that the Area EPS will apply to the Generation System. It is important to note that for some Generation System installations the Area EPS may wave some of the requirements of this section if they are not needed. An example of this is with rural or low capacity feeders which require more monitoring then larger capacity, typically urban feeders.

Another factor which will effect the metering, monitoring and control requirements will be the tariff under which the Interconnection Customer is supplied by the Area EPS. Table 5A has been written to cover most application, but some Area EPS tariffs may have greater or less metering, monitoring and control requirements then, as shown in Table 5A. .

TABLE 5A Metering, Monitoring and Control Requirements			
Generation System Capacity at Point of Common Coupling	**Metering**	**Generation Remote Monitoring**	**Generation Remote Control**
< 40 kW with all sales to Area EPS	Bi-Directional metering at the point of common coupling	None Required	None Required
< 40 kW with Sales to a party other then the Area EPS	Recording metering on the Generation System and a separate recording meter on the load	Interconnection Customer supplied direct dial phone line.	None Required
40 – 250kW with limited parallel	Detented Area EPS Metering at the Point of Common Coupling	None Required	None Required
40 – 250kW with extended parallel	Recording metering on the Generation System and a separate recording meter on the load	Interconnection Customer supplied direct dial phone line. Area EPS to supply it's own monitoring equipment	None Required
250 – 1000 kW with limited parallel	Detented Area EPS Metering at the Point of Common Coupling	Interconnection Customer supplied direct dial phone line and monitoring points available. See B (i)	None Required
250 – 1000 kW With extended parallel operation	Recording metering on the Generation System and a separate recording meter on the load.	Required Area EPS remote monitoring system See B (i)	None Required
>1000 kW With limited parallel Operation	Detented Area EPS Metering at the Point of Common Coupling	Required Area EPS SCADA monitoring system. See B (i)	None required
>1000 kW With extended parallel operation	Recording metering on the Generation System and a separate recording meter on the load.	Required Area EPS SCADA monitoring system See B (i)	Direct Control via SCADA by Area EPS of interface breaker.

"Detented" = A meter which is detented will record power flow in only one direction.

A) Metering

i) As shown in Table 5A the requirements for metering will depend up on the type of generation and the type of interconnection. For most installations, the requirement is a single point of metering at the Point of Common Coupling. The Area EPS Operator will install a special meter that is capable of measuring and recording energy flow in both directions, for three phase installations or two detented meters wired in series, for single phase installations.. A dedicated - direct dial phone line may be required to be supplied to the meter for the Area EPS's use to read the metering. Some monitoring may be done through the meter and the dedicated – direct dial phone line, so in many installations the remote monitoring and the meter reading can be done using the same dial-up phone line.

ii) Depending upon which tariff the Generation System and/or customer's load is being supplied under, additional metering requirements may result. Contact the Area EPS for tariff requirements. In some cases, the direct dial-phone line requirement may be waived by the Area EPS for smaller Generation Systems.

iii) All Area EPS's revenue meters shall be supplied, owned and maintained by the Area EPS. All voltage transformers (VT) and current transformers (CT), used for revenue metering shall be approved and/or supplied by the Area EPS. Area EPS's standard practices for instrument transformer location and wiring shall be followed for the revenue metering.

iv) For Generation Systems that sell power and are greater then 40kW in size, separate metering of the generation and of the load is required. A single meter recording the power flow at the Point of Common Coupling for both the Generation and the load, is not allowed by the rules under which the area transmission system is operated. The Area EPS is required to report to the regional reliability council (MAPP) the total peak load requirements and is also required to own or have contracted for, accredited generation capacity of 115% of the experienced peak load level for each month of the year. Failure to meet this requirement results in a large monetary penalty for the Area EPS operator.

v) For Generation Systems which are less then 40kW in rated capacity and are qualified facilities under PURPA (Public Utilities Regulatory Power Act – Federal Gov. 1978), net metering is allowed and provides the generation system the ability to back feed the Area EPS at some times and bank that energy for use at other times. Some of the qualified facilities under PURPA are solar, wind, hydro, and biomass. For these net-metered installations, the Area EPS may use a single meter to record the bi-directional flow or the Area EPS Operator may elect to use two detented meters, each one to record the flow of energy in one direction.

B) Monitoring (SCADA) is required as shown in table 5A. The need for monitoring is based on the need of the system control center to have the information necessary for the reliable operation of the Area EPS's. This remote monitoring is especially important during periods of abnormal and emergency operation.

The difference in Table 5A between remote monitoring and SCADA is that SCADA typically is a system that is in continuous communication with a central computer and provides updated values and status, to the Area EPS operator, within several seconds of the changes in the field. Remote monitoring on the other hand will tend to provide updated values and status within minutes of the change in state of the field. Remote monitoring is typically less expensive to install and operate.

i) Where Remote Monitoring or SCADA is required, as shown in Table 5A, the following monitored and control points are required:

(1) Real and reactive power flow for each Generation System (kW and kVAR). Only required if separate metering of the Generation and the load is required, otherwise #4 monitored at the point of Common Coupling will meet the requirements.

(2) Phase voltage representative of the Area EPS's service to the facility.

(3) Status (open/close) of Distributed Generation and interconnection breaker(s) or if transfer switch is used, status of transfer switch(s).

(4) Customer load from Area EPS service (kW and kVAR).

(5) Control of interconnection breaker - if required by the Area EPS operator.

When telemetry is required, the Interconnection Customer must provide the communications medium to the Area EPS's Control Center. This could be radio, dedicated phone circuit or other form of communication. If a telephone circuit is used, the Interconnection Customer must also provide the telephone circuit protection. The Interconnection Customer shall coordinate the RTU (remote terminal unit) addition with the Area EPS. The Area EPS may require a specific RTU and/or protocol to match their SCADA or remote monitoring system.

6. Protective Devices and Systems

A) Protective devices required to permit safe and proper operation of the Area EPS while interconnected with customer's Generation System are shown in the figures at the end of this document. In general, an increased degree of protection is required for increased Distributed Generation size. This is due to the greater magnitude of short circuit currents and the potential impact to system stability from these installations. Medium and large installations require more sensitive and faster protection to minimize damage and ensure safety.

If a transfer system is installed which has a user accessible selection of several transfer modes, the transfer mode which has the greatest protection requirements will establish the protection requirements for that transfer system.

The Interconnection Customer shall provide protective devices and systems to detect the Voltage, Frequency, Harmonic and Flicker levels as defined in the IEEE 1547 standard during periods when the Generation System is operated in parallel with the Area EPS. The Interconnection Customer shall be responsible for the purchase, installation, and maintenance of these devices. Discussion on the requirements for these protective devices and systems follows:

i) Relay settings

(1) If the Generation System is utilizing a Type-Certified system, such as a UL listed inverter a Professional Electrical Engineer is not required to review and approve the design of the interconnecting system. If the Generation System interconnecting device is not Type-Certified or if the Type-Certified Generation System interconnecting device has additional design modifications made, the Generation System control, the protective system, and the interconnecting device(s) shall be reviewed and approved by a Professional Electrical Engineer, registered in the State of Minnesota.

(2) A copy of the proposed protective relay settings shall be supplied to the Area EPS operator for review and approval, to ensure proper coordination between the generation system and the Area EPS.

ii) Relays

(1) All equipment providing relaying functions shall meet or exceed ANSI/IEEE Standards for protective relays, i.e., C37.90, C37.90.1 and C37.90.2.

(2) Required relays that are not "draw-out" cased relays shall have test plugs or test switches installed to permit field testing and maintenance of the relay without unwiring or disassembling the equipment. Inverter based protection is excluded from this requirement for Generation Systems <40kW at the Point of Common Coupling.

(3) Three phase interconnections shall utilize three phase power relays, which monitor all three phases of voltage and current, unless so noted in the appendix one-lines.

(4) All relays shall be equipped with setting limit ranges at least as wide as specified in IEEE 1547 , and meet other requirements as specified in the Area EPS interconnect study. Setting limit ranges are not to be confused with the actual relay settings required for the proper operation of the installation. At a minimum, all protective systems shall meet the requirements established in IEEE 1547 .

(a) <u>Over-current relays</u> (IEEE Device 50/51 or 50/51V) shall operate to trip the protecting breaker at a level to ensure protection of the equipment and at a speed to allow

proper coordination with other protective devices. For example, the over-current relay monitoring the interconnection breaker shall operate fast enough for a fault on the customer's equipment, so that no protective devices will operate on the Area EPS. 51V is a voltage restrained or controlled over-current relay and may be required to provide proper coordination with the Area EPS.

(b) Over-voltage relays (IEEE Device 59) shall operate to trip the Distributed Generation per the requirements of IEEE 1547 .

(c) Under-voltage relays (IEEE Device 27) shall operate to trip the Distributed Generation per the requirements of IEEE 1547

(d) Over-frequency relays (IEEE Device 81O) shall operate to trip the Distributed Generation off-line per the requirements of IEEE 1547 .

(e) Under-frequency relay (IEEE Device 81U) shall operate to trip the Distributed Generation off-line per the requirements of IEEE 1547 . For Generation Systems with an aggregate capacity greater then 30kW, the Distribution Generation shall trip off-line when the frequency drops below 57.0-59.8 Hz. typically this is set at 59.5 Hz, with a trip time of 0.16 seconds, but coordination with the Area EPS is required for this setting.

The Area EPS will provide the reference frequency of 60 Hz. The Distributed Generation control system must be used to match this reference. The protective relaying in the interconnection system will be expected to maintain the frequency of the output of the Generation.

(f) Reverse power relays (IEEE Device 32) (power flowing from the Generation System to the Area EPS) shall operate to trip the Distributed Generation off-line for a power flow to the system with a maximum time delay of 2.0 seconds.

(g) Lockout Relay (IEEE Device 86) is a mechanically locking device which is wired into the close circuit of a breaker or switch and when tripped will prevent any close signal from closing that device. This relay requires that a person manually resets the lockout relay before that device can be reclosed. These relays are used to ensure that a denergized system is not reenergized by automatic control action, and prevents a failed control from auto-reclosing an open breaker or switch.

(h) Transfer Trip – All Generation Systems are required to disconnect from the Area EPS when the Area EPS is disconnected from its source, to avoid unintentional islanding. With larger Generation Systems, which remain in parallel with the Area EPS, a transfer trip system may be required to sense the loss of the Area EPS source. When the Area EPS source is lost, a signal is sent to the Generation System to separate the Generation from the Area EPS. The size of the Generation System vs the capacity and minimum loading on the feeder will dictate the need for transfer trip installation. The Area EPS interconnection study will identify the specific requirements.

If multiple Area EPS sources are available or multiple points of sectionalizing on the Area EPS, then more then one transfer trip system may be required. Area EPS interconnection study will identify the specific requirements. For some installations the alternate Area EPS source(s) may not be utilized except in rare occasions. If this is the situation, the Interconnection Customer may elect to have the Generation System locked out when the alternate source(s) are utilized, if agreeable to the Area EPS operator.

(i) Parallel limit timing relay (IEEE Device 62PL) set at a maximum of 120 seconds for

soft transfer installations and set no longer then 100ms for quick transfer installations, shall trip the Distributed Generation circuit breaker on limited parallel interconnection systems. Power for the 62 PL relay must be independent of the transfer switch control power. The 62PL timing must be an independent device from the transfer control and shall not be part of the generation PLC or other control system.

TABLE 6A
SUMMARY OF RELAYING REQUIREMENTS

Type of Interconnection	Over-current (50/51)	Voltage (27/59)	Frequency (81 0/U)	Reverse Power (32)	Lockout (86)	Parallel Limit Timer	Sync-Check (25)	Transfer Trip
Open Transition Mechanically Interlocked (Fig. 1)	__	__	__	__	__	__	__	__
Quick Open Transition Mechanically Interlocked (Fig. 2)	__	__	__	__	Yes	Yes	Yes	__
Closed Transition (Fig. 2)	__	__	__	__	Yes	Yes	Yes	__
Soft Loading Limited Parallel Operation (Fig. 3)	Yes	Yes	Yes	Yes	Yes	Yes	Yes	__
Soft Loading Extended Parallel < 250 kW (Fig. 4)	Yes	Yes	Yes	__	Yes	__	Yes	__
Soft Loading Extended Parallel >250kW (Fig.4)	Yes	Yes	Yes	__	Yes	__	Yes	Yes
Inverter Connection (Fig. 5)								
< 40 kW	Yes	Yes	Yes	__	Yes	__	__	__
40 kW – 250kW	Yes	Yes	Yes	__	Yes	__	__	__
> 250 kW	Yes	Yes	Yes	__	Yes	__	__	Yes

7. Agreements

A) Interconnection Agreement – This agreement is required for all Generation Systems that parallel with the Area EPS. Each Area EPS's tariffs contain standard interconnection agreements. There are different interconnection agreements depending upon the size and type of Generation System. This agreement contains the terms and conditions upon which the Generation System is to be connected, constructed and maintained, when operated in parallel with the Area EPS. Some of the issues covered in the interconnection agreement are as follows;

i) Construction Process

ii) Testing Requirements

iii) Maintenance Requirements

iv) Firm Operating Requirements such as Power Factor

v) Access requirements for the Area EPS personnel

vi) Disconnection of the Generation System (Emergency and Non-emergency)

vii) Term of Agreement

viii) Insurance Requirements

ix) Dispute Resolution Procedures

B) Operating Agreement – For Generation Systems that normally operate in parallel with the Area EPS, an agreement separate from the interconnection agreement, called the "operating agreement", is usually created. This agreement is created for the benefit of both the Interconnection Customer and the Area EPS operator and will be agreed to between the Parties. This agreement will be dynamic and is intended to be updated and reviewed annually. For some smaller systems, the operating agreement can simply be a letter agreement for larger and more intergraded Generation Systems the operating agreement will tend to be more involved and more formal. The operating agreement covers items that are necessary for the reliable operation of the Local and Area EPS. The items typically included in the operating agreement are as follows;

i) Emergency and normal contact information for both the Area EPS operations center and for the Interconnection Customer

ii) Procedures for periodic Generation System test runs.

iii) Procedures for maintenance on the Area EPS that effect the Generation System.

iv) Emergency Generation Operation Procedures

8. Testing Requirements

A) Pre-Certification of equipment

The most important part of the process to interconnect generation with Local and Area EPS's is safety. One of the key components of ensuring the safety of the public and employees is to ensure that the design and implementation of the elements connected to the electrical power system operate as required. To meet this goal, all of the electrical wiring in a business or residence, is required by the State of Minnesota to be listed by a recognized testing and certification laboratory, for its intended purpose. Typically we see this as "UL" listed. Since Generation Systems have tended to be uniquely designed for each installation they have been designed and approved by Professional Engineers. As the number of Generation Systems installed increase, vendors are working towards creating equipment packages which can be tested in the factory and then will only require limited field testing. This will allow us to move towards "plug and play" installations. For this reason, this standard recognizes the efficiency of "pre-certification" of Generation System equipment packages that will help streamline the design and installation process.

An equipment package shall be considered certified for interconnected operation if it has been submitted by a manufacture, tested and listed by a nationally recognized testing and certification laboratory (NRTL) for continuous utility interactive operation in compliance with the applicable codes and standards. Presently generation paralleling equipment that is listed by a nationally recognized testing laboratory as having met the applicable type-testing requirements of UL 1741 and IEEE 929, shall be acceptable for interconnection without additional protection system requirements. An "equipment package" shall include all interface components including switchgear, inverters, or other interface devices and may include an integrated generator or electric source. If the equipment package has been tested and listed as an integrated package which includes a generator or other electric source, it shall not required further design review, testing or additional equipment to meet the certification requirements for interconnection. If the equipment package includes only the interface components (switchgear, inverters, or other interface devices), then the Interconnection Customer shall show that the generator or other electric source being utilized with the equipment package is compatible with the equipment package and consistent with the testing and listing specified for the package. Provided the generator or electric source combined with the equipment package is consistent with the testing ad listing performed by the nationally recognized testing and certification laboratory, no further design review, testing or additional equipment shall be required to meet the certification requirements of this interconnection procedure. A certified equipment package does not include equipment provided by the Area EPS.

The use of Pre-Certified equipment does not automatically qualify the Interconnection Customer to be interconnected to the Area EPS. An application will still need to be submitted and an interconnection review may still need to be performed, to determine the compatibility of the Generation System with the Area EPS.

B) Pre-Commissioning Tests

i) Non-Certified Equipment

(1) Protective Relaying and Equipment Related to Islanding

(a) Distributed generation that is not Type-Certified (type tested), shall be equipped with protective hardware and/or software designed to prevent the Generation from being connected to a de-energized Area EPS.

(b) The Generation may not close into a de-energized Area EPS and protection provided

to prevent this from occurring. It is the Interconnection Customer's responsibility to provide a final design and to install the protective measures required by the Area EPS. The Area EPS will review and approve the design, the types of relays specified, and the installation. Mutually agreed upon exceptions may at times be necessary and desirable. It is strongly recommended that the Interconnection Customer obtain Area EPS written approval prior to ordering protective equipment for parallel operation. The Interconnection Customer will own these protective measures installed at their facility.

(c) The Interconnection Customer shall obtain prior approval from the Area EPS for any revisions to the specified relay calibrations.

C) Commissioning Testing

The following tests shall be completed by the Interconnection Customer. All of the required tests in each section shall be completed prior to moving on to the next section of tests. The Area EPS operator has the right to witness all field testing and to review all records prior to allowing the system to be made ready for normal operation The Area EPS shall be notified, with sufficient lead time to allow the opportunity for Area EPS personnel to witness any or all of the testing.

i) Pre-testing The following tests are required to be completed on the Generation System prior to energization by the Generator or the Area EPS. Some of these tests may be completed in the factory if no additional wiring or connections were made to that component. These tests are marked with a "*"

(1) Grounding shall be verified to ensure that it complies with this standard, the NESC and the NEC.

(2) * CT's (Current Transformers) and VT's (Voltage Transformers) used for monitoring and protection, shall be tested to ensure correct polarity, ratio and wiring

(3) CT's shall be visually inspected to ensure that all grounding and shorting connections have been removed where required.

(4) Breaker / Switch tests – Verify that the breaker or switch cannot be operated with interlocks in place or that the breaker or switch cannot be automatically operated when in manual mode. Various Generation Systems have different interlocks, local or manual modes etc. The intent of this section is to ensure that the breaker or switches controls are operating properly.

(5) * Relay Tests – All Protective relays shall be calibrated and tested to ensure the correct operation of the protective element. Documentation of all relay calibration tests and settings shall be furnished to the Area EPS operator.

(6) Trip Checks - Protective relaying shall functionally tested to ensure the correct operation of the complete system. Functional testing requires that the complete system is operated by the injection of current and/or voltage to trigger the relay element and proving that the relay element trips the required breaker, lockout relay or provides the correct signal to the next control element. Trip circuits shall be proven through the entire scheme (including breaker trip)

For factory assembled systems, such as inverters the setting of the protective elements may occur at the factory. This section requires that the complete system including the wiring and the device being tripped or activated is proven to be in working condition through the injection of current and/or voltage.

(7) Remote Control, SCADA and Remote Monitoring tests – All remote control functions and remote monitoring points shall be verified operational. In some cases, it may not be possible to verify all of the analog values prior to energization. Where appropriate, those points may be verified during the energization process

(8) Phase Tests – the Interconnection Customer shall work with the Area EPS operator to complete the phase test to ensure proper phase rotation of the Generation and wiring.

(9) Synchronizing test – The following tests shall be done across a open switch or racked out breaker. The switch or breaker shall be in a position that it is incapable of closing between the Generation System and the Area EPS for this test. This test shall demonstrate that at the moment of the paralleling-device closure, the frequency, voltage and phase angle are within the required ranges, stated in IEEE 1547 . This test shall also demonstrate that is any of the parameters are outside of the ranges stated; the paralleling-device shall not close. For inverter-based interconnected systems this test may not be required unless the inverter creates fundamental voltages before the paralleling device is closed.

ii) On-Line Commissioning Test – the following tests will proceed once the Generation System has completed Pre-testing and the results have been reviewed and approved by the Area EPS operator. For smaller Generation Systems the Area EPS may have a set of standard interconnection tests that will be required. On larger and more complex Generation Systems the Interconnection Customer and the Area EPS operator will get together to develop the required testing procedure. All on-line commissioning test shall be based on written test procedures agreed to between the Area EPS operator and the Interconnection Customer.

Generation System functionally shall be verified for specific interconnections as follows:

(1) Anti-Islanding Test – For Generation Systems that parallel with the utility for longer then 100msec.

(a) The Generation System shall be started and connected in parallel with the Area EPS source

(b) The Area EPS source shall be removed by opening a switch, breaker etc.

(c) The Generation System shall either separate with the local load or stop generating

(d) The device that was opened to remove the Area EPS source shall be closed and the Generation System shall not reparallel with the Area EPS for at least 5 minutes.

iii) Final System Sign-off.

(1) To ensure the safety of the public, all interconnected customer owned generation systems which do not utilize a Type-Certified system shall be certified as ready to operate by a Professional Electrical Engineer registered in the State of Minnesota, prior to the installation being considered ready for commercial use.

iv) Periodic Testing and Record Keeping

(1) Any time the interface hardware or software, including protective relaying and generation control systems are replaced and/or modified, the Area EPS operator shall be notified. This notification shall, if possible, be with sufficient warning so that the Area EPS personnel can be involved in the planning for the modification and/or witness the verification testing. Verification testing shall be completed on the replaced and/or modified equipment and systems. The involvement of the Area EPS personnel will depend upon the complexity of the Generation System and the component being replaced and/or modified. Since the Interconnection Customer and the Area EPS operator are now operating an interconnected system. It is important for each to communicate changes in operation, procedures and/or equipment to ensure the safety and reliability of the Local and Area EPSs.

(2) All interconnection-related protection systems shall be periodically tested and maintained, by the Interconnection Customer, at intervals specified by the manufacture or system integrator. These intervals shall not exceed 5 years. Periodic test reports and a log of inspections shall be maintained, by the Interconnection Customer and made available to the Area EPS operator upon request. The Area EPS operator shall be notified prior to the period testing of the protective systems, so that Area EPS personnel may witness the testing if so desired.

(a) Verification of inverter connected system rated 15kVA and below may be completed as follows; The Interconnection Customer shall operate the load break disconnect switch and verify the Generator automatically shuts down and does not restart for at least 5 minutes after the switch is close

(b) Any system that depends upon a battery for trip/protection power shall be checked and logged once per month for proper voltage. Once every four years the battery(s) must be either replaced or a discharge test performed. Longer intervals are possible through the use of “station class batteries” and Area EPS operator approval.

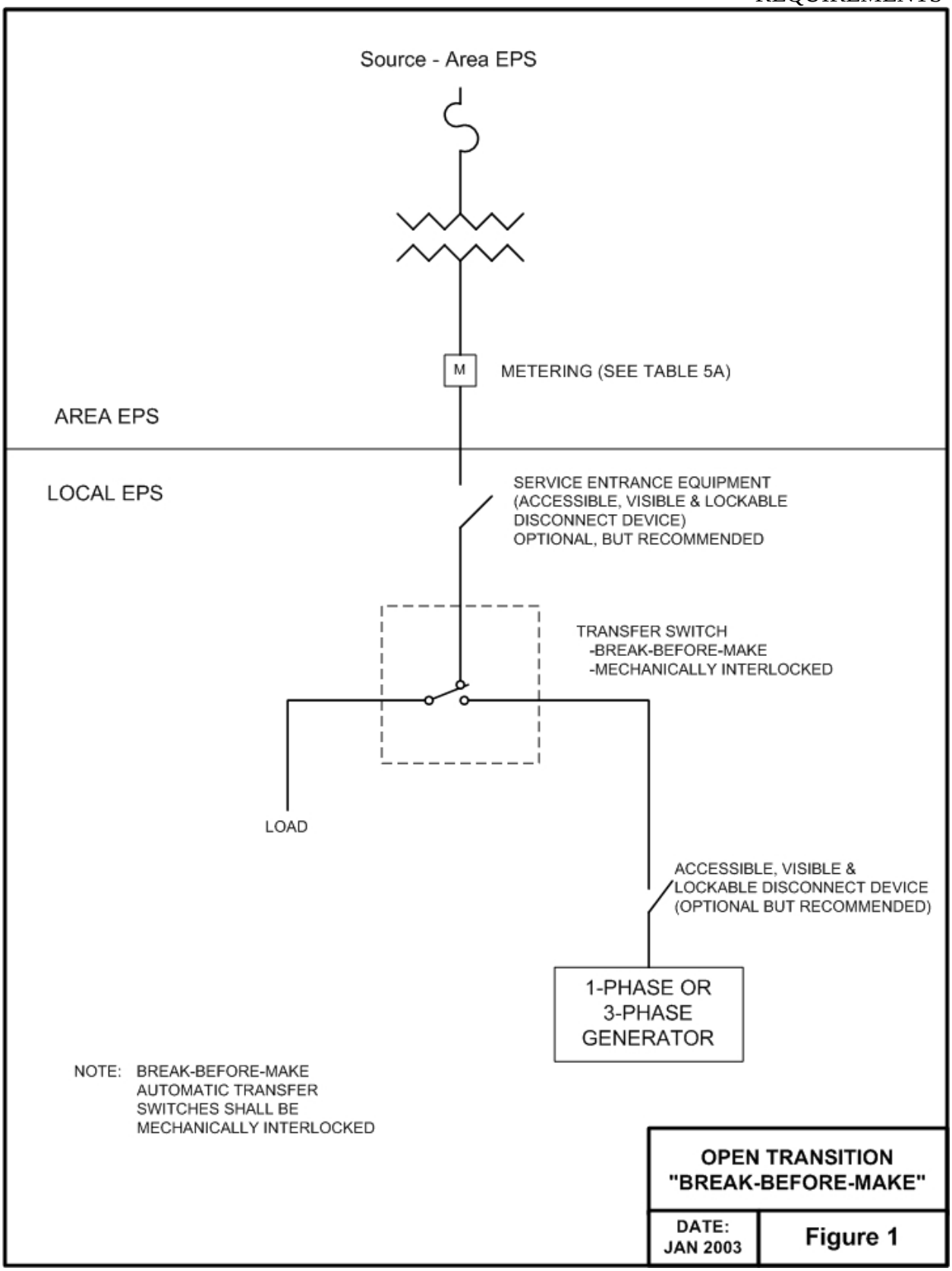
Source - Area EPS
M
METERING (SEE TABLE 5A)
AREA EPS
LOCAL EPS
SERVICE ENTRANCE EQUIPMENT
(ACCESSIBLE, VISIBLE & LOCKABLE
DISCONNECT DEVICE)
OPTIONAL, BUT RECOMMENDED
TRANSFER SWITCH
-BREAK-BEFORE-MAKE
-MECHANICALLY INTERLOCKED
LOAD
ACCESSIBLE, VISIBLE &
LOCKABLE DISCONNECT DEVICE
(OPTIONAL BUT RECOMMENDED)
1-PHASE OR
3-PHASE
GENERATOR
NOTE: BREAK-BEFORE-MAKE
AUTOMATIC TRANSFER
SWITCHES SHALL BE
MECHANICALLY INTERLOCKED
OPEN TRANSITION
"BREAK-BEFORE-MAKE"
DATE:
JAN 2003
Figure 1

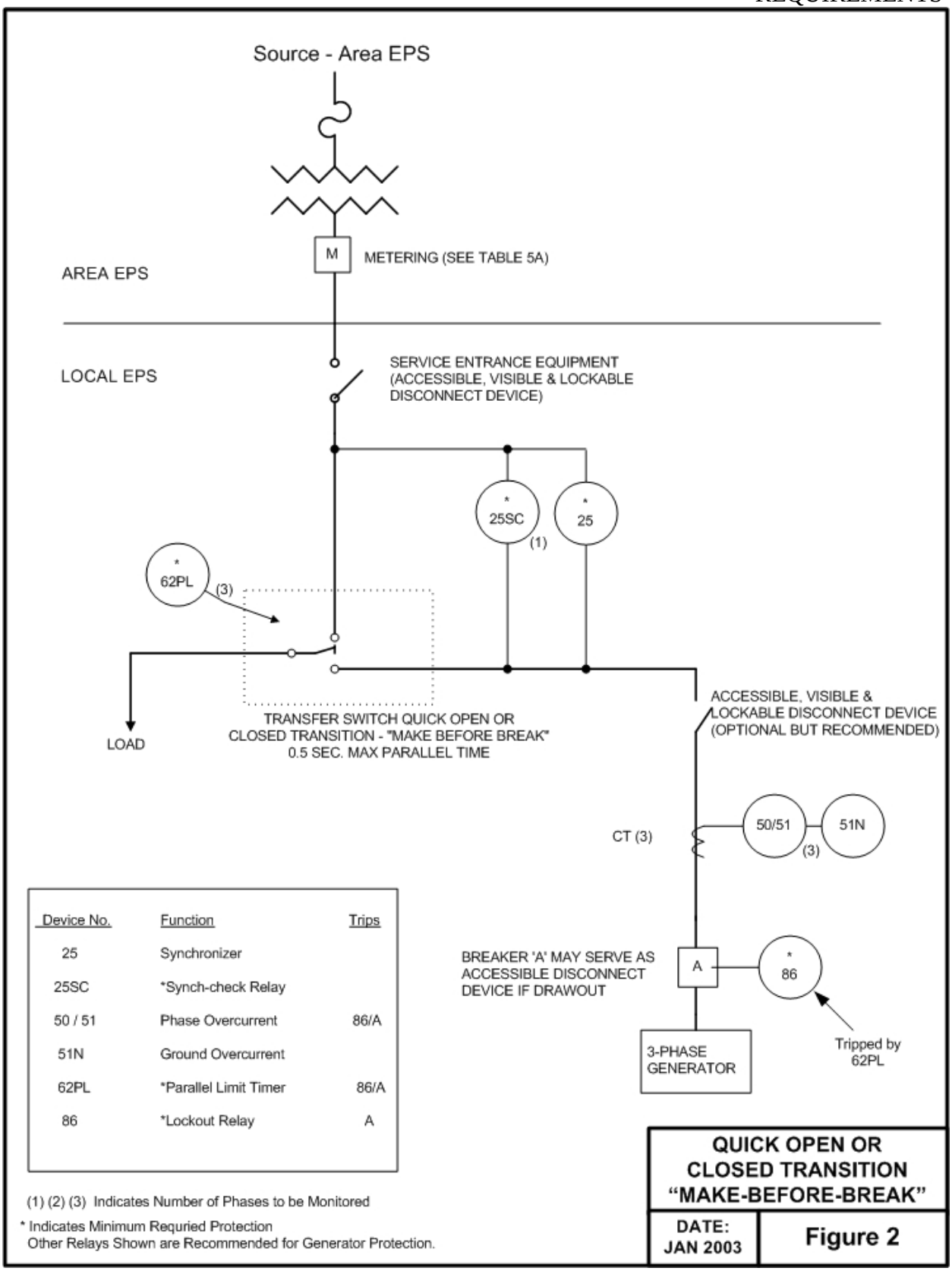

Device No.	Function	Trips
25	Synchronizer	
25SC	*Synch-check Relay	
50 / 51	Phase Overcurrent	86/A
51N	Ground Overcurrent	
62PL	*Parallel Limit Timer	86/A
86	*Lockout Relay	A

(1) (2) (3) Indicates Number of Phases to be Monitored

* Indicates Minimum Requried Protection
Other Relays Shown are Recommended for Generator Protection.

QUICK OPEN OR CLOSED TRANSITION "MAKE-BEFORE-BREAK"

DATE: JAN 2003

Figure 2

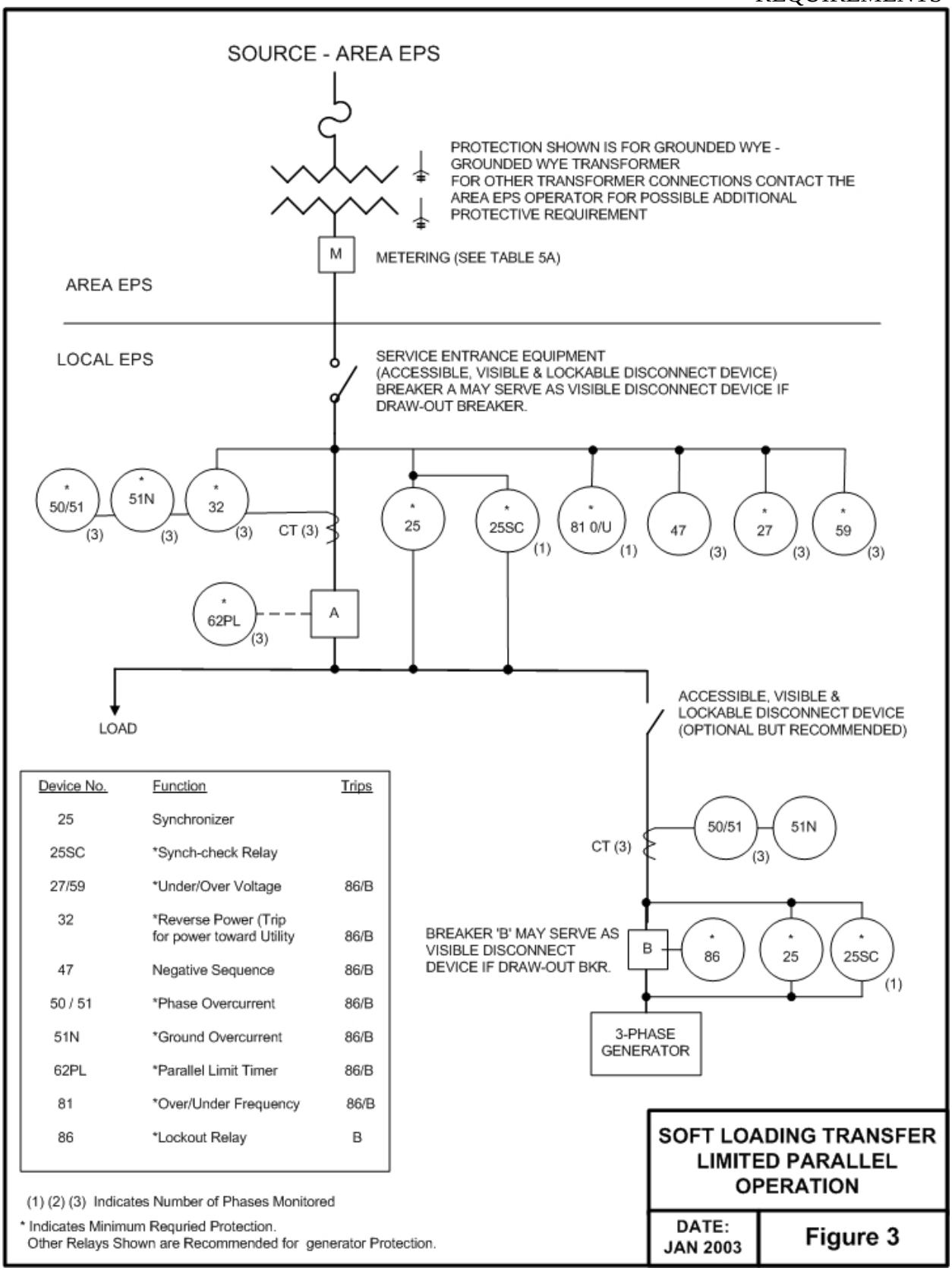

Device No.	Function	Trips
25	Synchronizer	
25SC	*Synch-check Relay	
27/59	*Under/Over Voltage	86/B
32	*Reverse Power (Trip for power toward Utility	86/B
47	Negative Sequence	86/B
50 / 51	*Phase Overcurrent	86/B
51N	*Ground Overcurrent	86/B
62PL	*Parallel Limit Timer	86/B
81	*Over/Under Frequency	86/B
86	*Lockout Relay	B

(1) (2) (3) Indicates Number of Phases Monitored

* Indicates Minimum Requried Protection.
Other Relays Shown are Recommended for generator Protection.

SOFT LOADING TRANSFER LIMITED PARALLEL OPERATION

DATE: JAN 2003

Figure 3

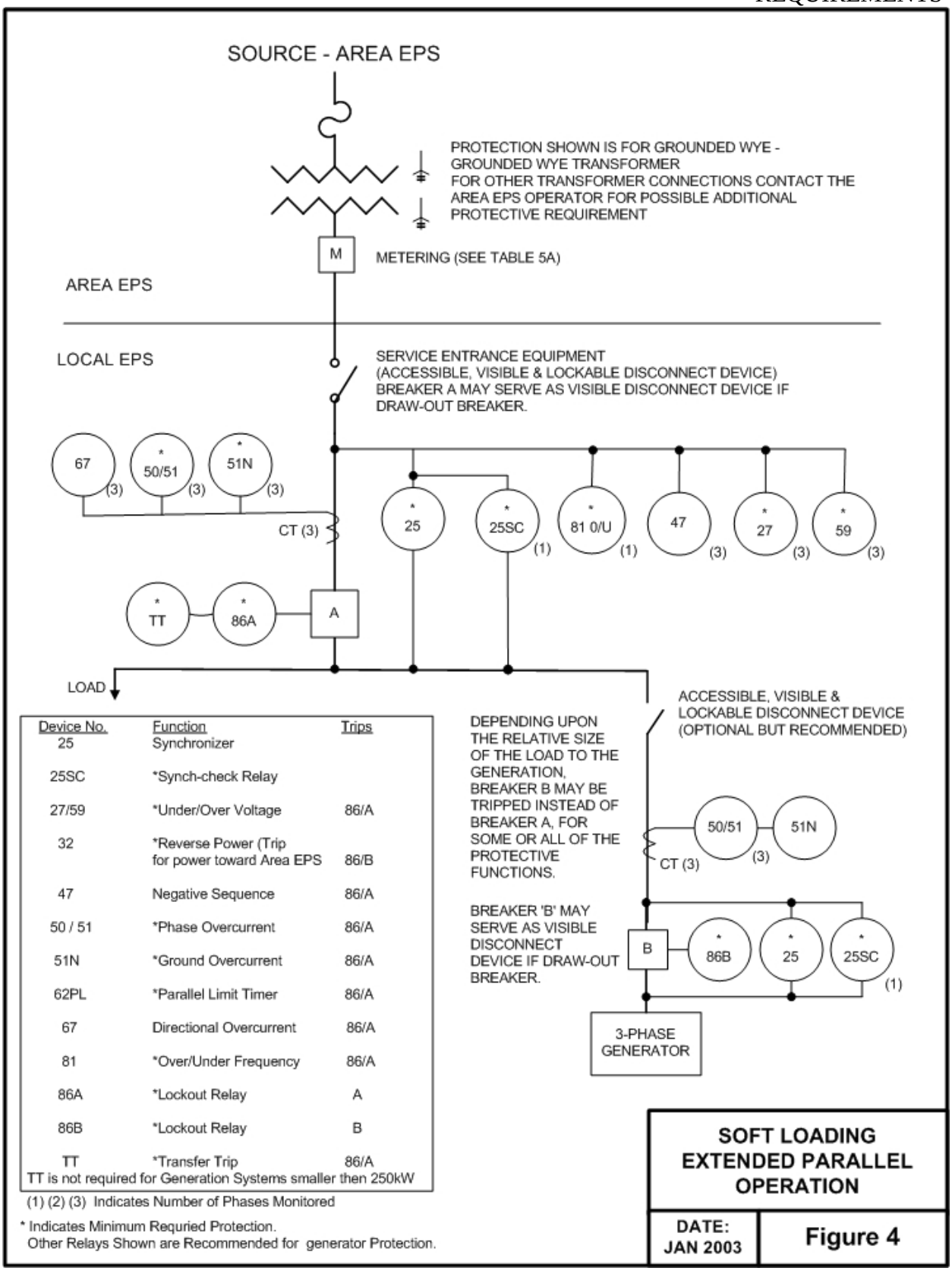

Device No.	Function	Trips
25	Synchronizer	
25SC	*Synch-check Relay	
27/59	*Under/Over Voltage	86/A
32	*Reverse Power (Trip for power toward Area EPS	86/B
47	Negative Sequence	86/A
50 / 51	*Phase Overcurrent	86/A
51N	*Ground Overcurrent	86/A
62PL	*Parallel Limit Timer	86/A
67	Directional Overcurrent	86/A
81	*Over/Under Frequency	86/A
86A	*Lockout Relay	A
86B	*Lockout Relay	B
TT	*Transfer Trip	86/A

TT is not required for Generation Systems smaller then 250kW

(1) (2) (3) Indicates Number of Phases Monitored

* Indicates Minimum Requried Protection.
Other Relays Shown are Recommended for generator Protection.

SOFT LOADING EXTENDED PARALLEL OPERATION

DATE: JAN 2003

Figure 4

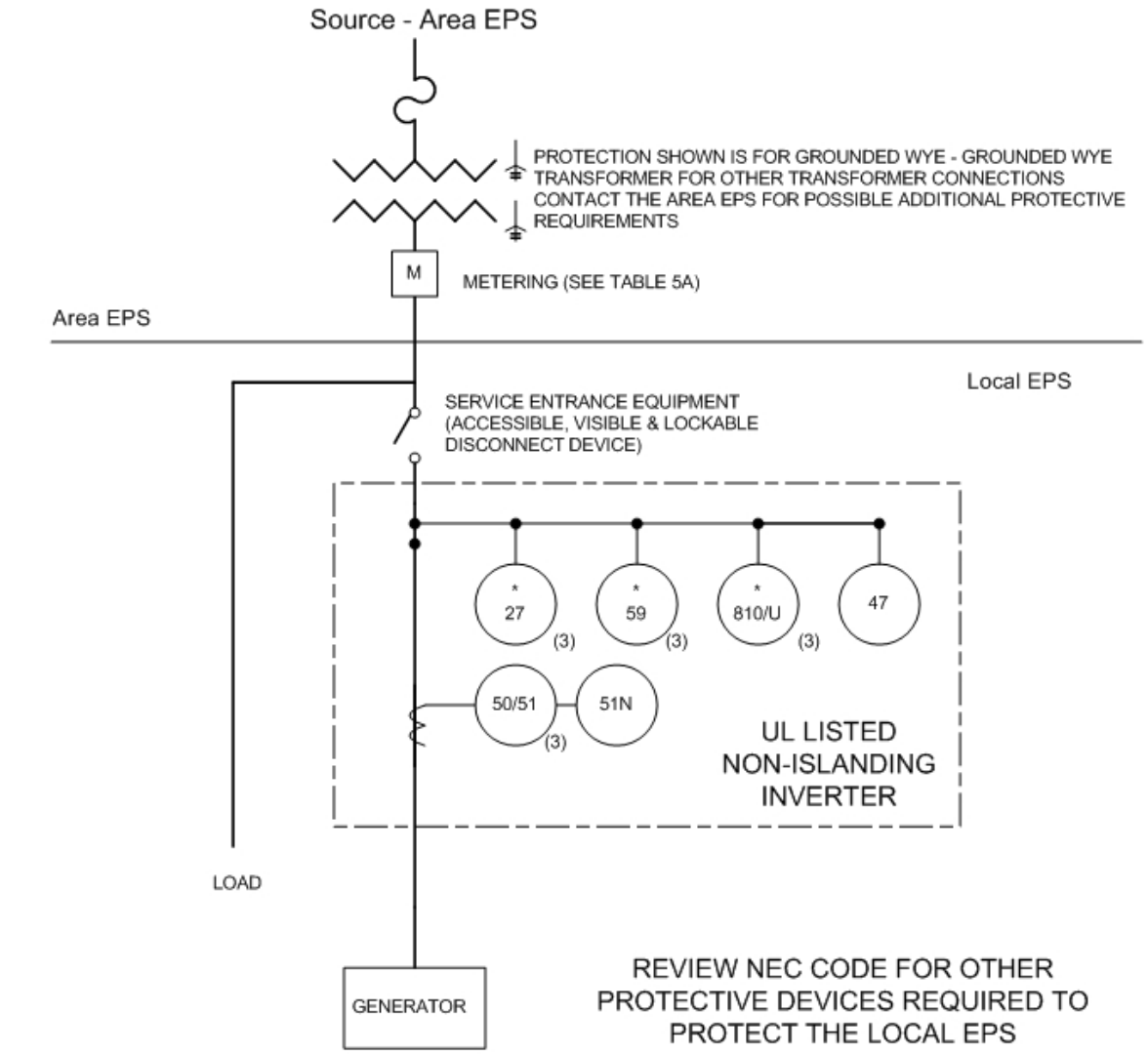

REVIEW NEC CODE FOR OTHER PROTECTIVE DEVICES REQUIRED TO PROTECT THE LOCAL EPS

Device No.	Function
27/59	*Under/Over Voltage
47	Negative Sequence
50 / 51	Phase Overcurrent
51N	Ground Overcurrent
81O/U	*Over/Under Frequency

FOR INVERTER CONNECTED GENERATION SYSTEMS, GREATER THEN 250KW, TRANSFER TRIP MAY BE REQUIRED BY THE AREA EPS OPERATOR

(1) (2) (3) Indicates Number of Phases Monitored

* Indicates Minimum Requried Protection.
Other Relays Shown are Recommended for Generator Protection.

INVERTER CONNECTED

DATE: JAN 2003

Figure 5